Transistor Feedback

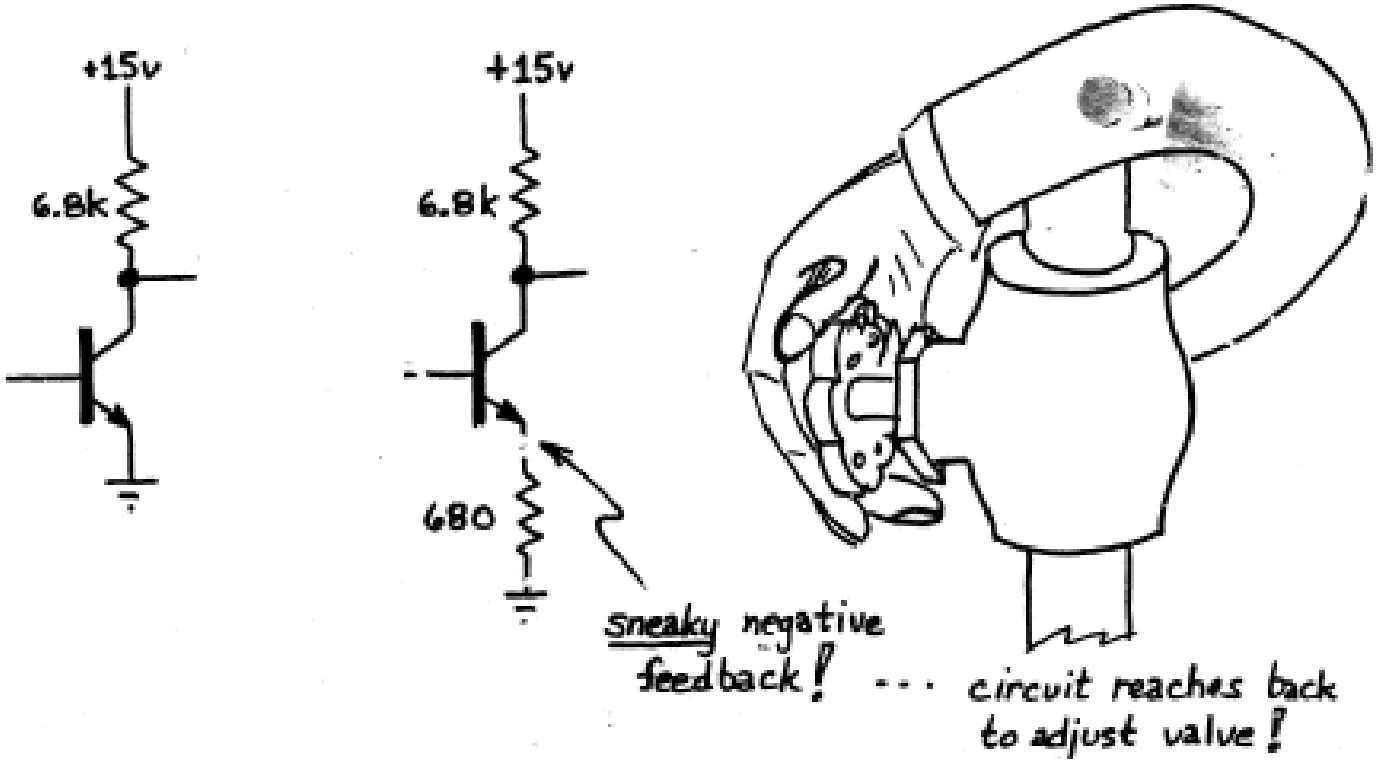

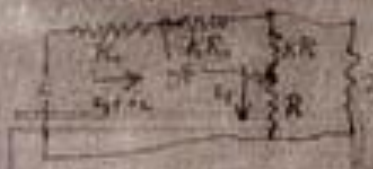

$$\Delta E = (i_1 + i_2) K R_0 = i_1 K R$$

$$\Delta E = K[i_1(R_0 + R) + i_2 R_0]$$

$$E = i_1 K R_0 + i_1 (K+1) R_0$$

$$E = [K+1][(i_1 + i_2)(R_0) + i_1 K]$$

$$E = (K+1)[i_1(R_0 + R) + i_2 R_0]$$

$$E = (K+1)[i_1(R_0 + R) + i_2 R_0]$$

$$\frac{\Delta E}{E} = \frac{K}{K+1}$$

$$\frac{\Delta E}{E} = \frac{K}{1+K} = 1 +$$

$$\frac{E}{\Delta E} = \left[1 + \frac{1}{K}\right]$$

$$\mu = 1 + \frac{1}{K}$$

$$\frac{1}{K} = \mu - 1$$

$$K = \frac{1}{\mu - 1}$$

$$K = \frac{1}{1.6}$$

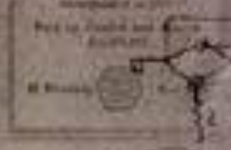

Disclosed in principle to E. C. Blessing Aug 6, 1927

H. S. Black Aug 15, 1927

Witnessed and understood
E. C. Blessing
Aug 15, 1927

- If Vin = 1 V what is Vout?

A) 0V

B) 1V

C) -1V

D) 15V

E) -15V

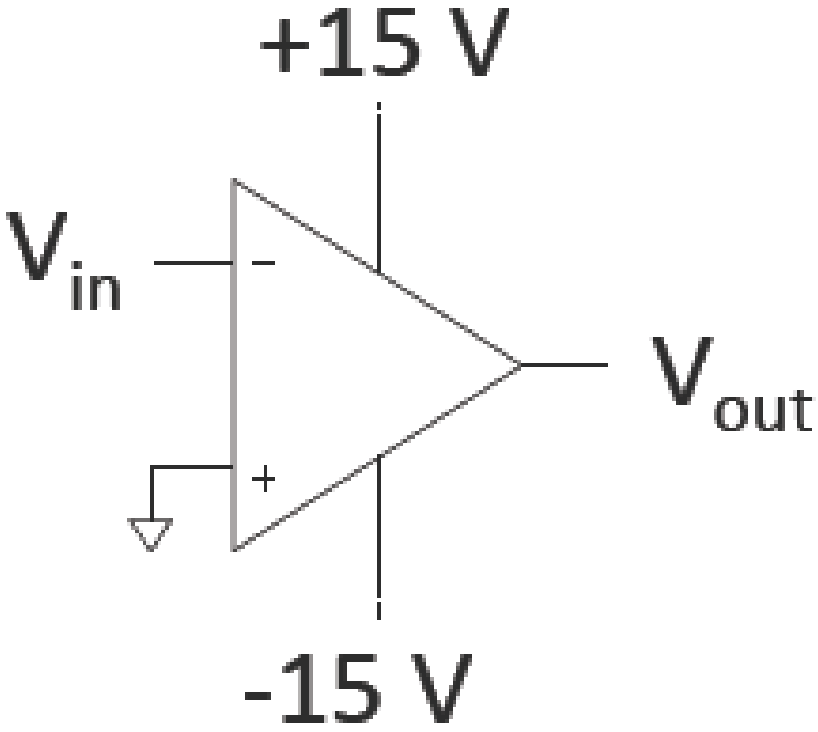

- If Vin = 1 V what is Vout?

A) 0V

B) 1V

C) -1V

D) 15V

E) -15V

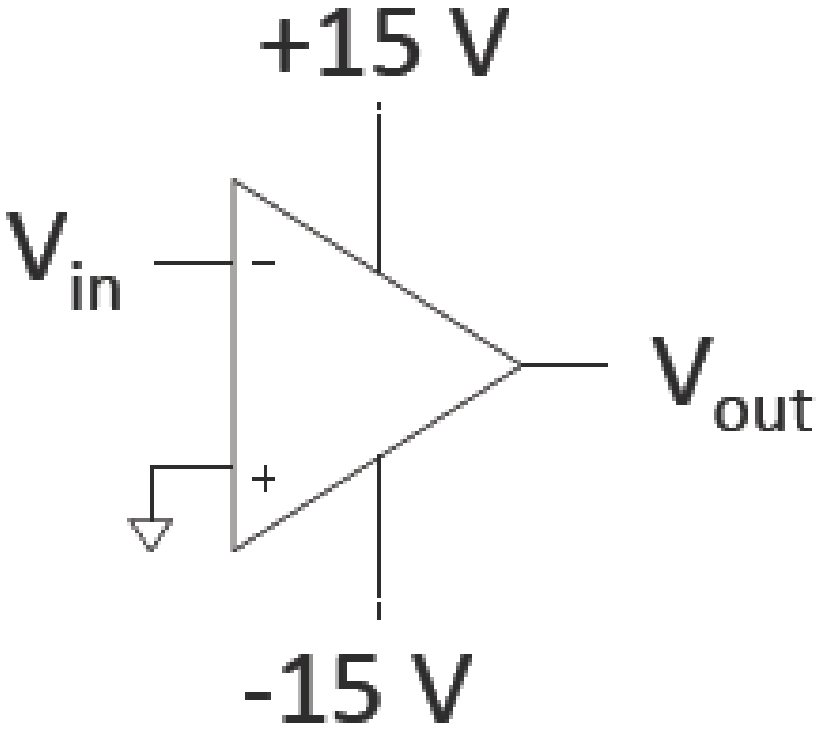

- If Vin = 1 V what is Vout?

A) 0V

B) B) 1V

C) -1V

D) 15V

E) -15V

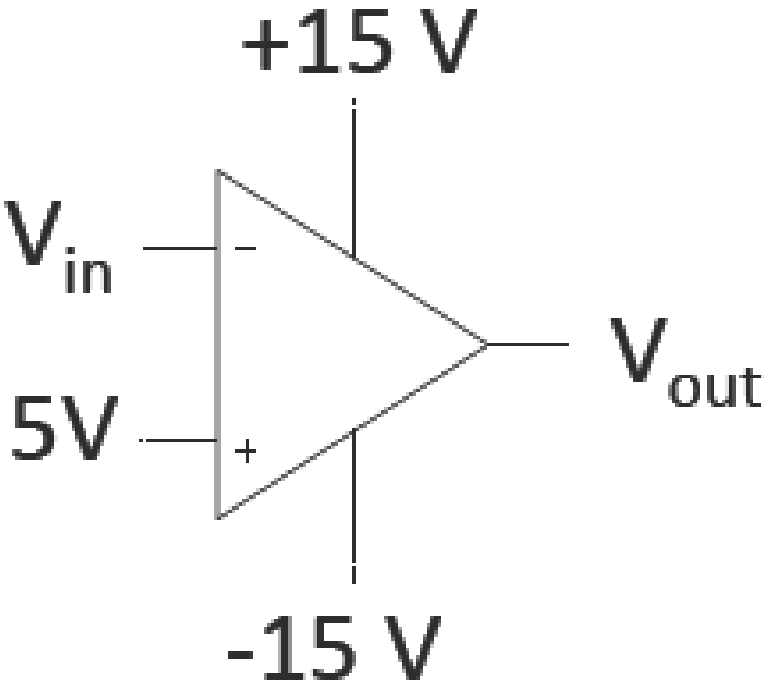

- If Vin = 1 V what is Vout?

A) 0V

B) B) 1V

C) -1V

D) 15V

E) -15V

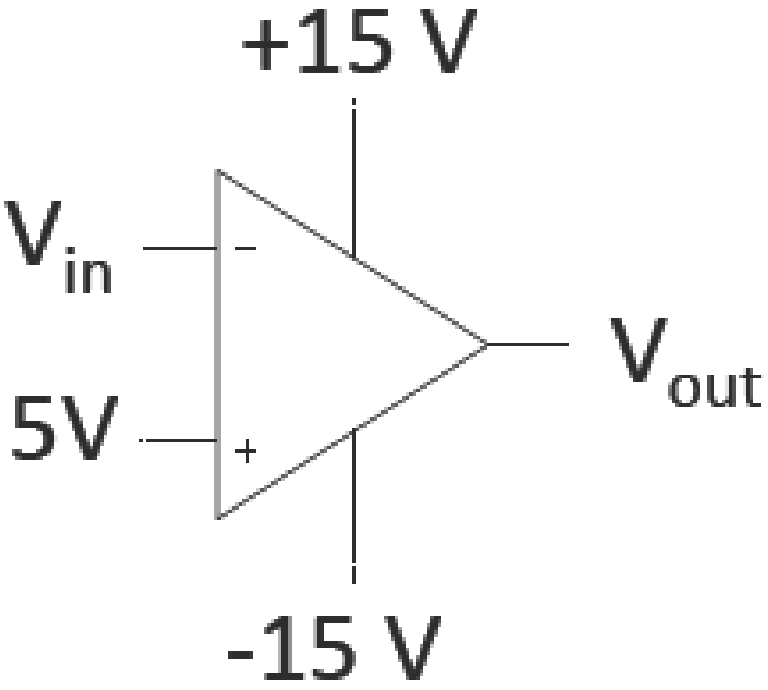

If Vin = 1V, what is Vout?

A. 0V

B. 0.1V

C. -0.1V

D. 10V

E. -10V

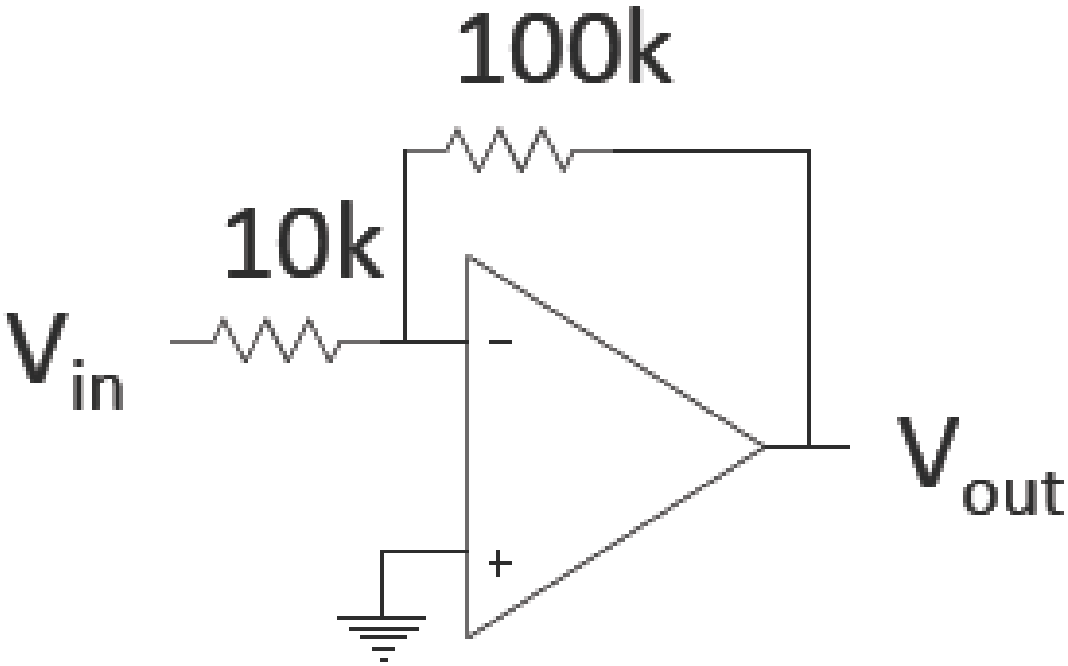

If Vin = 1V, what is Vout?

A. 0V

B. 1V

C. -1V

D. 10V

E. -10V

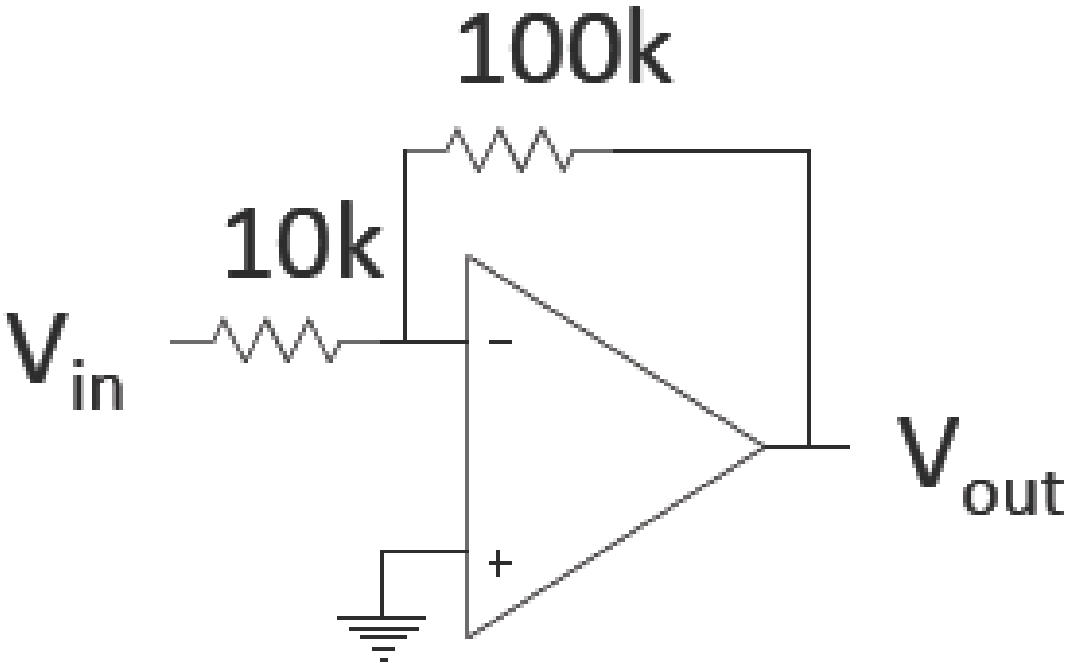

What is Vout/Vin?

A. 0

B. 1

C. -1

D. $10^5 \sim \infty$

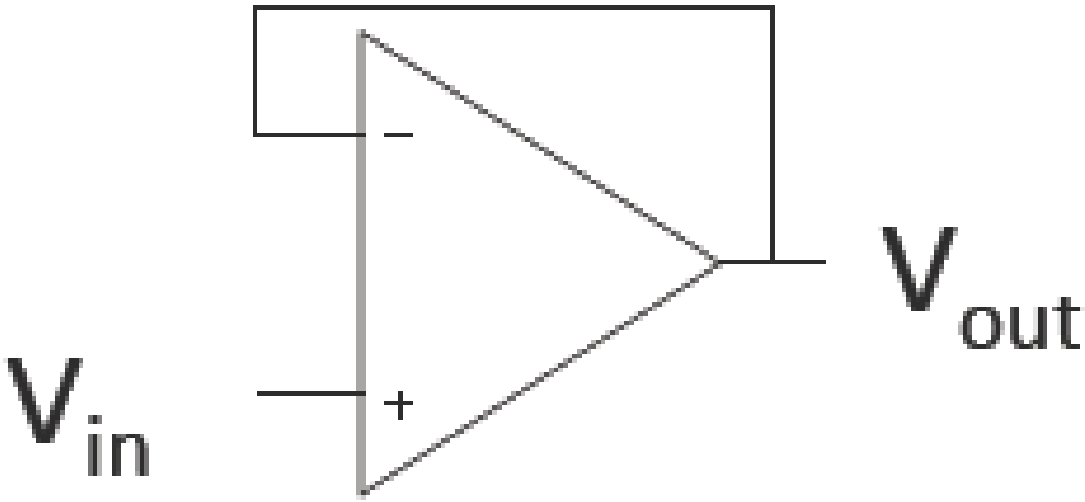

What is Vout/Vin?

A. 0

B. 1

C. -1

D. $10^5 \sim \infty$

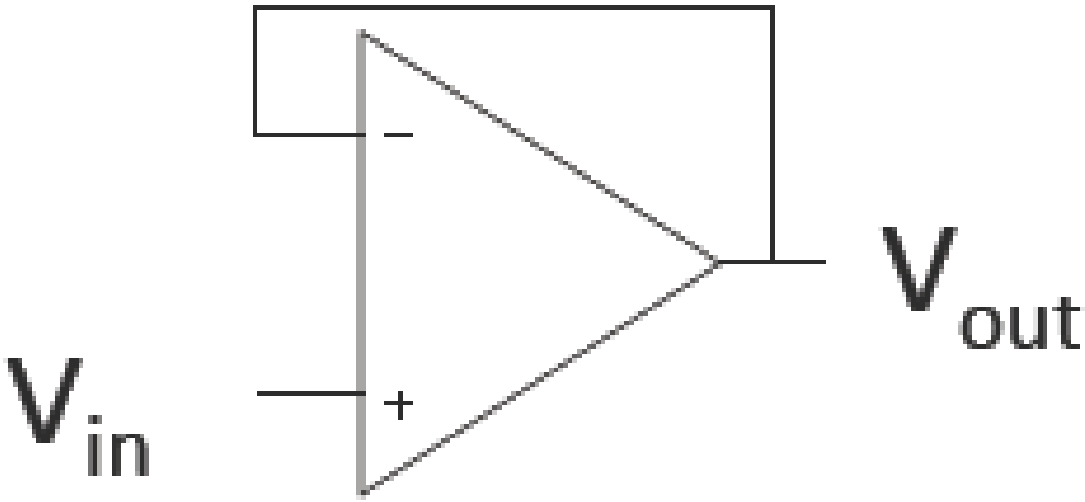

- What is voltage at non-inverting input V_B?

A) $V_B = V_2 \ R/R_f$

B) $V_B = V_2 \ R_f/R$

C) $V_B = V_2 \ R/(R_f + R)$

D) $V_B = V_2 \ R_f/(R_f + R)$

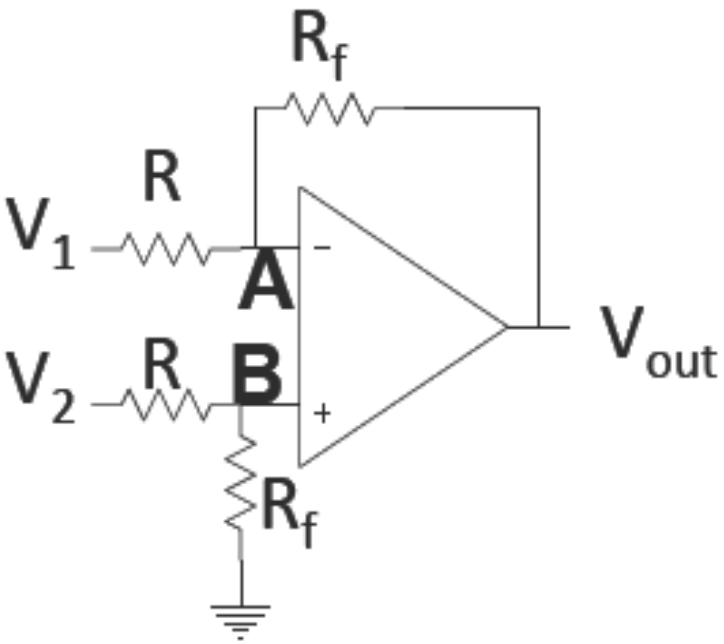

- What is voltage at non-inverting input V_B?

A) $V_B = V_2 \ R/R_f$

B) $V_B = V_2 \ R_f/R$

C) $V_B = V_2 \ R/(R_f + R)$

D) $V_B = V_2 \ R_f/(R_f + R)$

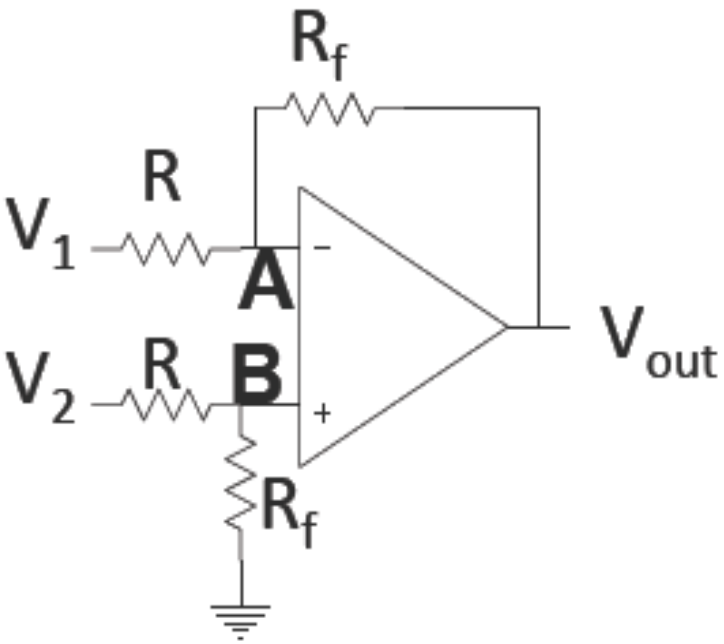

- What is voltage at inverting input V_A?

A) $V_A = (V_1 - V_{out}) R/(R_f + R)$

B) $V_A = (V_1) R_f/(R_f + R) + V_{out}$

C) $V_A = (V_1 - V_{out}) R_f/(R_f + R) + V_{out}$

D) $V_A = (V_1 - V_{out}) R_f/(R_f + R)$

E) 0

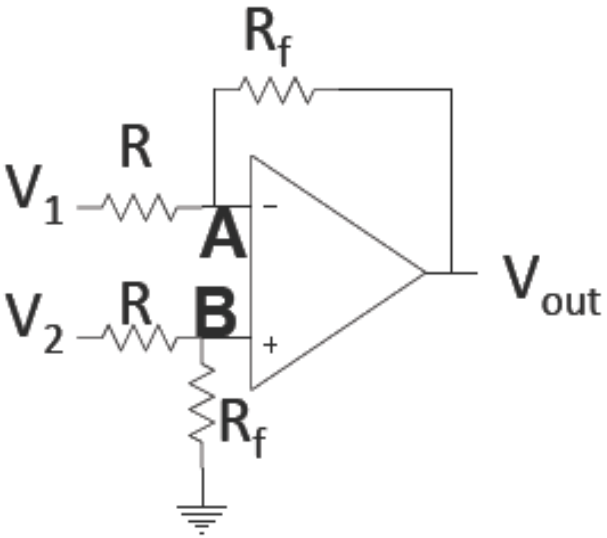

- What is voltage at inverting input V_A?

A) $V_A = (V_1 - V_{out}) R/(R_f + R)$

B) $V_A = (V_1) R_f/(R_f + R) + V_{out}$

C) $V_A = (V_1 - V_{out}) R_f/(R_f + R) + V_{out}$

D) $V_A = (V_1 - V_{out}) R_f/(R_f + R)$

E) 0